TrynEx International, LLC, 531 Ajax Drive, Madison Heights, MI 48071-2429 • www.snowexproducts.com

October 15, 2026
Lit. No. 94120, Rev. 07

SnowEx®

Automatixx®
ATTACHMENT SYSTEM

8600

SPEEDWING™ Snowplow

Blade Assembly 77740
Big Box Assembly 77840-1, 77840-3

Parts List

AUTHENTIC SnowEx® PARTS & ACCESSORIES

A DIVISION OF DOUGLAS DYNAMICS, LLC

TABLE OF CONTENTS

SPEEDWING™ BLADE ASSEMBLY 4

A-FRAME ASSEMBLY 8

HEADGEAR ASSEMBLY 10

HYDRAULIC AND ELECTRICAL COMPONENTS 12

- Hydraulic Unit 12
- Lift and Angle Rams 14
- Hoses and Fittings 15
- Electrical Components 16

VEHICLE-SIDE HARNESS DIAGRAM 17

HEADLAMP KITS 18–19

Blade Components

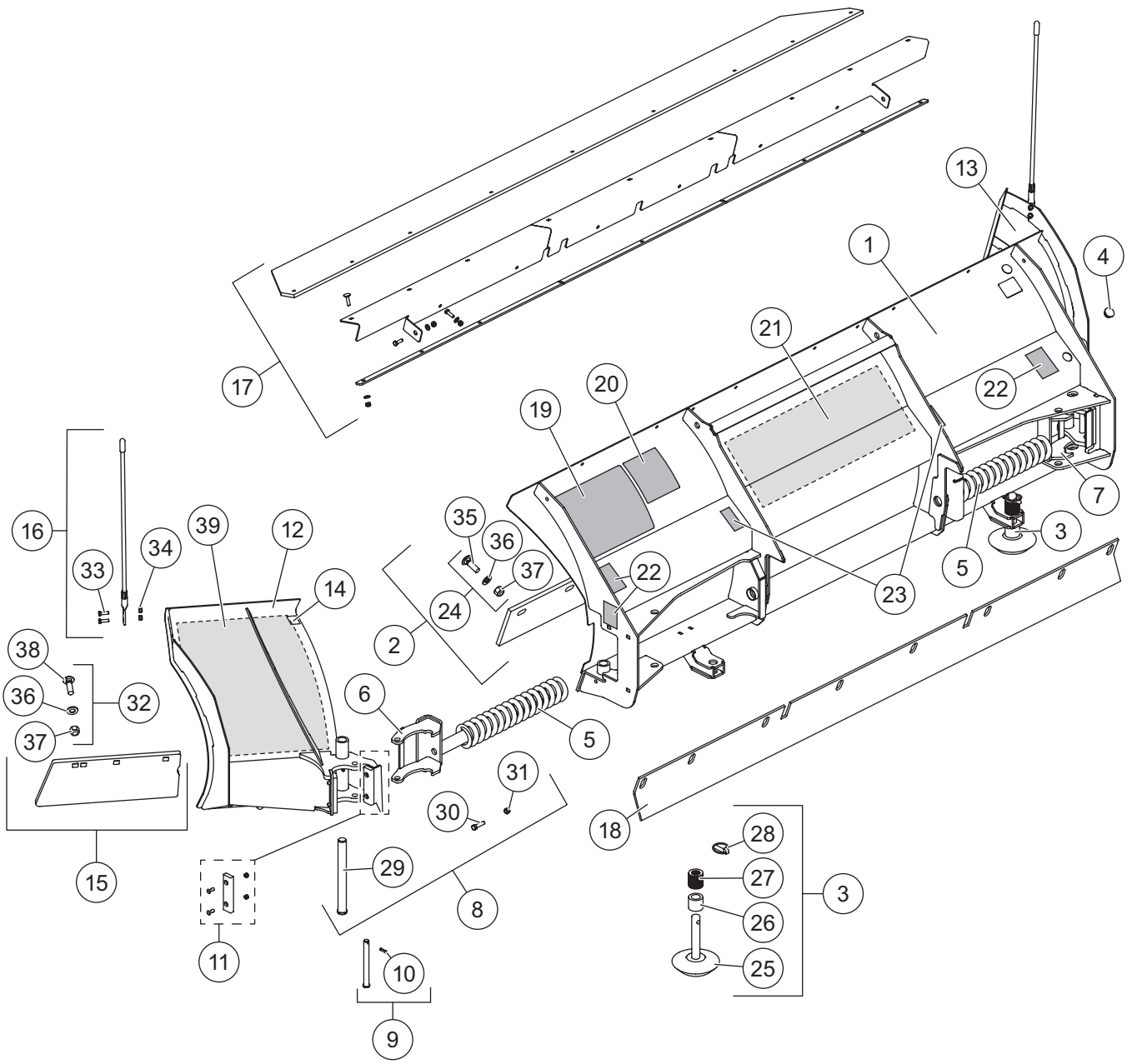

SPEEDWING™ BLADE ASSEMBLY

77740 Blade Components							
Item	**Part**	**Qty**	**Description**	**Item**	**Part**	**Qty**	**Description**
1	84559	1	Moldboard (w/labels)	15	42383	1	Wing Cutting Edge Kit (DS & PS)
2	84462	1	Moldboard Cutting Edge Kit	16	84525	1	24" Blade Guides (set of 2)
3	53595	2	Plow Shoe Assembly	ns*	84477	1	36" Poly Blade Guides (set of 2)
4	B61614	2	Plug, Ø1.00 Finishing	17*	84518	1	Deflector Kit
5	42725	2	Compression Spring	18*	84461	1	Back Drag Edge
6	42392	1	Spring Guide – DS	19	52203	1	Label – Attach/Detach, Automatixx®
7	42393	1	Spring Guide – PS	20	59900	1	Label – Warning/Caution, Snowplows
8	42396	2	Hinge Pin Kit	21	77704	1	Label – Logo, Center Moldboard
9	42397	2	Spring Guide Pin Kit	22		4	Label – Warning, Multiple Pinch Points
10	42943	2	1/4 x 1 Coiled Spring Pin	23	29256	2	Label – Warning, Crush Hazard
11	42395	4	Bumper Kit	ns	84643	1	Blade Label Kit, SPEEDWING™ (incl. items 19–23)
12	84652	1	Wing – DS				
13	84653	1	Wing – PS	ns	77728	1	Label Kit – Logo, SPEEDWING Wings (both)
14	43528	2	Wear Strip – Wing Top				
Item 2			**84462 Moldboard Cutting Edge Kit**				
		1	Cutting Edge 8600SW	24	41774	1	Bolt Bag – Moldboard Cutting Edge
Item 3			**53595 Plow Shoe Assembly**				
25	53596	1	Disc Shoe	27	91192	34	Flat Washer, Special
26	60045	2	1-1/8 ID, 1-5/8 OD x 1-1/2 Spacer	28		2	7/16 x 1-3/4 Linchpin
Item 8			**42396 Hinge Pin Kit**				
29	42727	1	1 x 10-1/4 Hinge Pin	31		2	3/8-16 Hex Locknut GB
30		2	3/8-16 x 1-1/2 Hex Cap Screw G5				
Item 15			**42383 Wing Cutting Edge Kit (DS & PS)**				
		2	Cutting Edge – SW Wing	32	84684	1	Wing Cutting Edge Hardware Kit
Item 16			**84525 24" Blade Guide Assembly (set of 2)**				
33		4	5/16-18 x 1 Hex Cap Screw G5	34		4	5/16-18 Hex Locknut GB
Item 24			**41774 Bolt Bag – Moldboard Cutting Edge**				
35		8	5/8-11 x 2-1/2 Carriage Bolt G5	37		8	5/8-11 Hex Locknut GB
36		8	5/8 Hardened Flat Washer				
Item 32			**84684 Wing Cutting Edge Hardware Kit**				
36		6	5/8 Hardened Flat Washer	38		6	5/8-11 x 2 Carriage Bolt G5
37		6	5/8-11 Hex Locknut GB				
84643 Blade Label Kit, SPEEDWING							
19	52203	1	Label – Attach/Detach, Automatixx	22	32593EN	4	Label – Warning, Multiple Pinch Points
20	59900	1	Label – Warning/Caution, Snowplows	23	29256	2	Label – Warning, Crush Hazard
21	77704	1	Label – Logo, Center Moldboard				
77728 Label Kit, SPEEDWING Wings (both)							
39	77706	1	Label – Logo, SPEEDWING Blade DS	ns	77707	1	Label – Logo, SPEEDWING Blade PS
ns = not shown							G = Grade

* Accessory only.

Blade Components

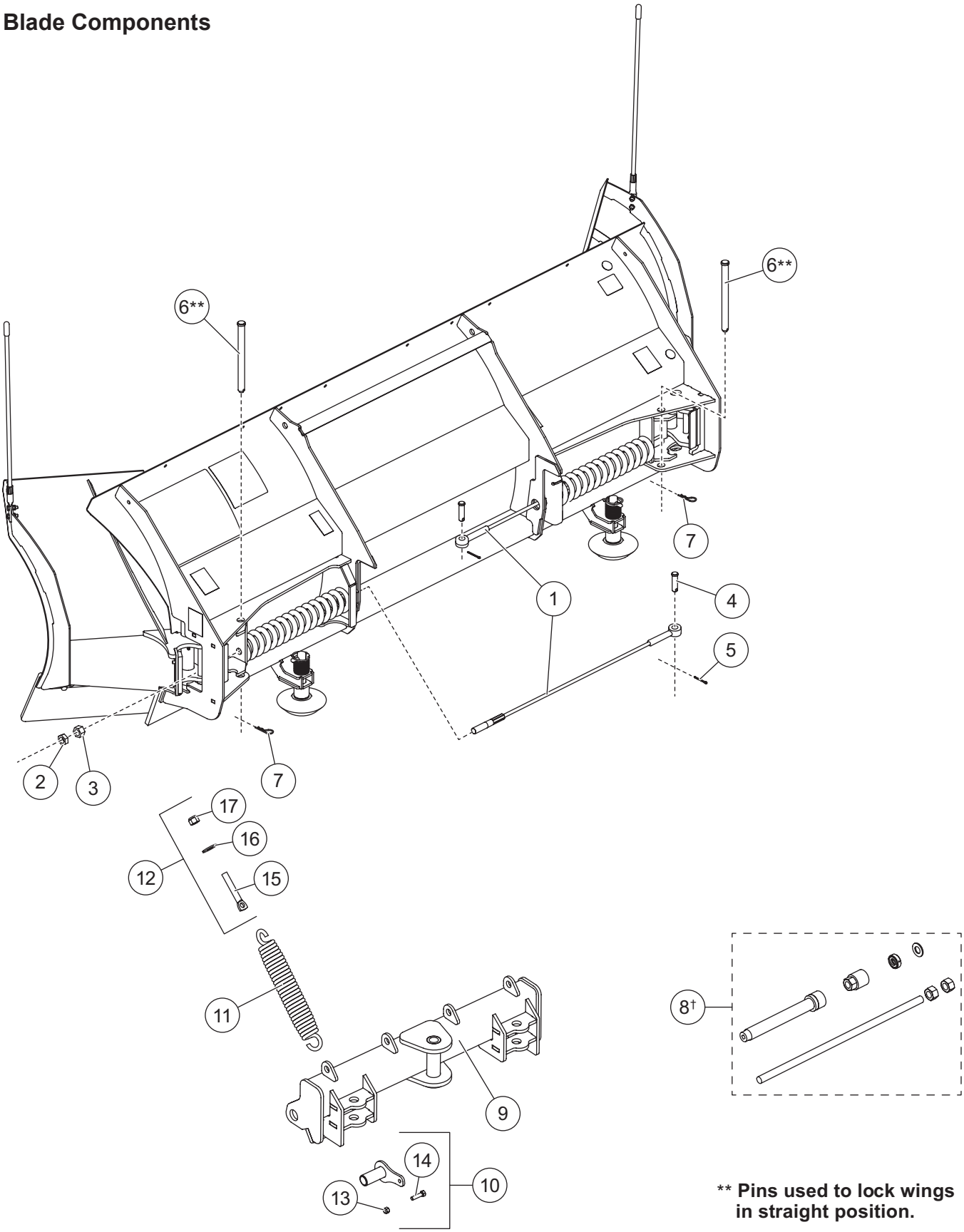

** Pins used to lock wings in straight position.

SPEEDWING™ BLADE ASSEMBLY

Blade Components – SPEEDWING							
Item	**Part**	**Qty**	**Description**	**Item**	**Part**	**Qty**	**Description**
1	42389	2	Cable Assembly w/Hardware (incl. items 2–5)	7	91962	2	1/8 Hairpin Cotter
				8†	69780	–	Wing Spring Removal Tool
2	B61615	2	3/4-10 Hex Jam Nut	9	84577	1	Quadrant
3	B61343	2	3/4-10 Hex Nut	10	42388	2	Pivot Bushing Kit
4	B61563	2	0.625 x 2.33 Clevis Pin	11	23039	4	Trip Spring
5	90601	2	1/4 x 1-1/2 Cotter Pin	12	83990	4	Trip Spring Eyebolt Kit
6	42738	2	3/4 x 9 Clevis Pin				
Item 10			**42388 Pivot Bushing Kit**				
13		2	3/8-16 Hex Locknut GB	14		2	3/8-16 x 1-1/2 Hex Cap Screw G5
Item 12			**83990 Trip Spring Eyebolt Kit**				
15		4	5/8-11 x 4 Eyebolt G2	17		4	5/8-11 Hex Locknut GB
16		4	5/8 Hardened Flat Washer				
G = Grade							

† Service tool.

A-Frame Components

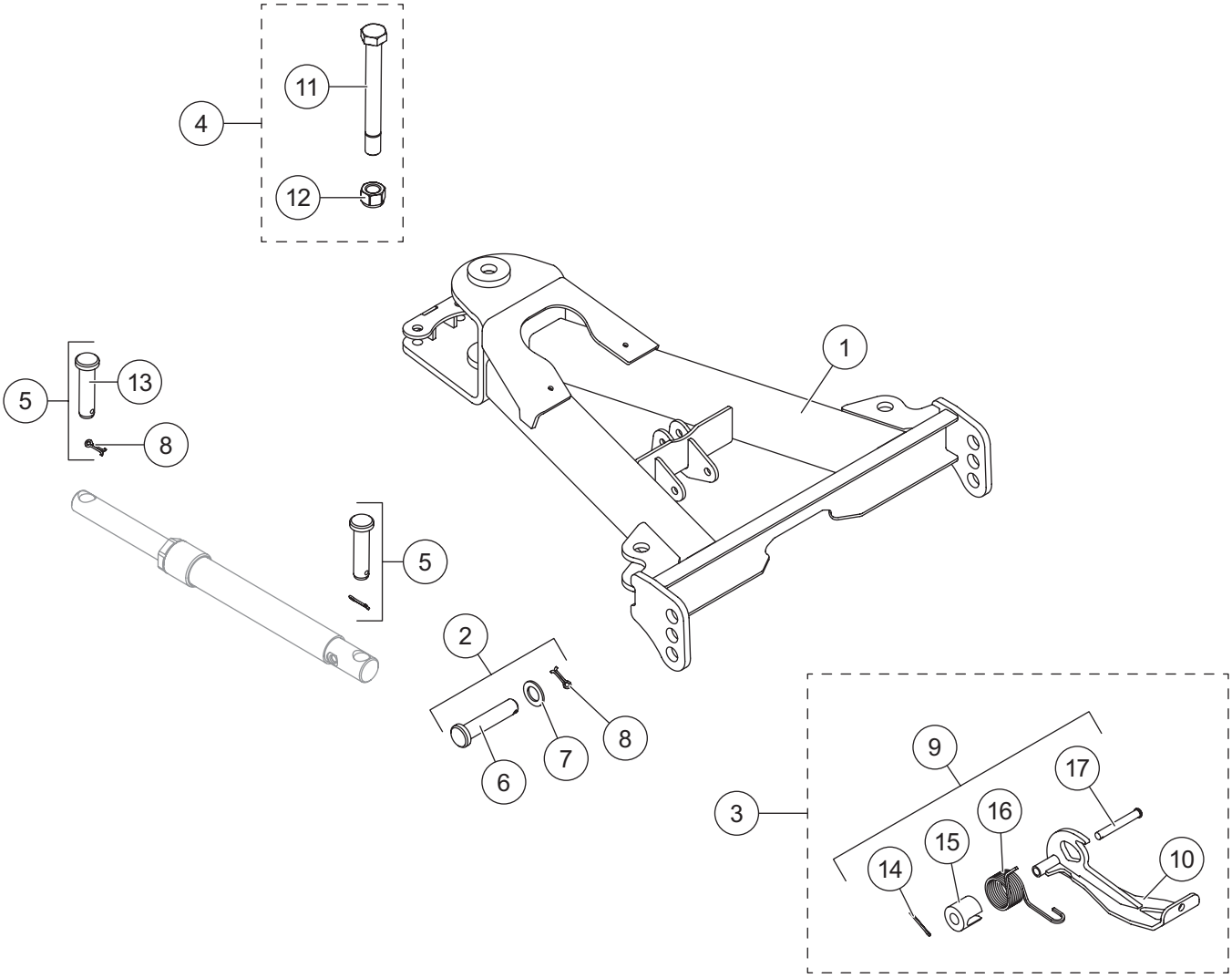

A-FRAME ASSEMBLY

A-Frame Components							
Item	**Part**	**Qty**	**Description**	**Item**	**Part**	**Qty**	**Description**
1	84590	1	A-Frame – SW	4	49768	1	Pivot Bolt Kit
2	84623	2	A-Frame Pin Kit	5	57968	4	1 x 4 Clevis Pin Kit
3	84593	1	Stand Kit				
Item 2			**84623 A-Frame Pin Kit**				
6		1	1 x 4-3/4 Clevis Pin	8		1	1/4 x 1-1/2 Cotter Pin
7		1	1" Flat Washer Special				
Item 3			**84593 Stand Kit**				
9	84615	1	Stand Hardware Kit	10		1	Stand
Item 4			**49768 Pivot Bolt Kit**				
11		1	1-8 x 9 Hex Cap Screw Special G5	12		1	1-8 Hex Locknut GB
Item 5			**57968 1 x 4 Clevis Pin Kit**				
8		1	1/4 x 1-1/2 Cotter Pin	13		1	1 x 4 Clevis Pin
Item 9			**84615 Stand Hardware Kit**				
14		1	5/32 x 1-1/2 Cotter Pin	16		1	Stand Torsion Spring
15		1	Stand Spring Spacer	17		1	1/2 x 3-11/16 Clevis Pin
G = Grade							

Headgear Components

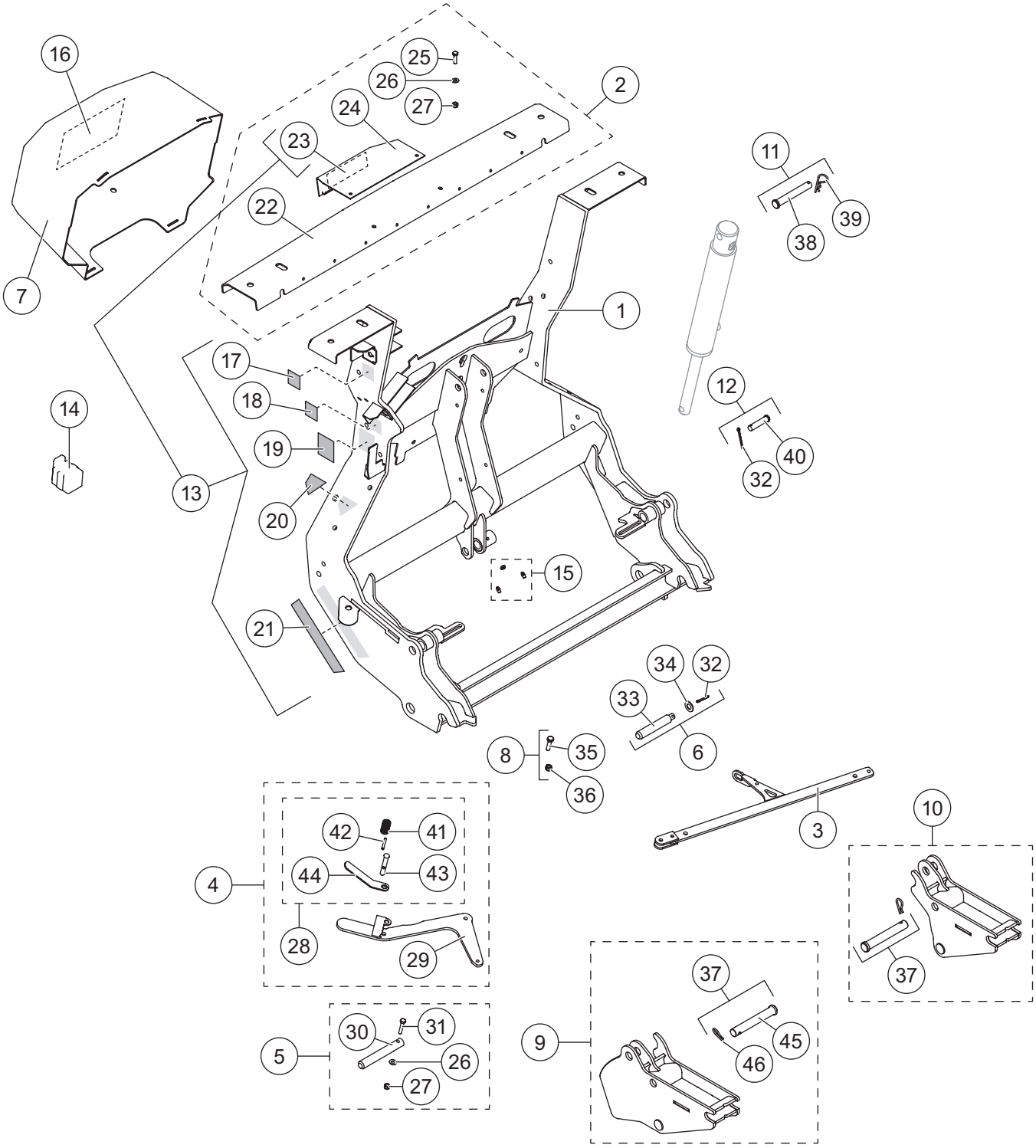

HEADGEAR ASSEMBLY

Headgear Components							
Item	**Part**	**Qty**	**Description**	**Item**	**Part**	**Qty**	**Description**
1	84622	1	Headgear (incl. item 15)	11	84632	1	Lift Ram Base Pin Kit
2	84624	1	Light Bar Channel	12	84627	1	Lift Ram Rod Pin Kit
3	84599	1	Link Arm	13	84647	1	Headgear Label Kit
4	84595	1	Attach Handle Kit	14	61246	1	Cable Boot
5	84603	2	Attach Pin Kit	15	84616	1	Grease Zerk (pkg of 3)
6	84601	1	Link Arm Jack Stand Pin Kit	16	43861	1	Label – Hydraulic Info, SPEEDWING™
7	84650	1	Hydraulic Cover – SW (incl. item 16)	17	52206	1	Label – Power Switch, Automatixx®
8	84635	1	Link Arm/Attach Handle Fastener Kit	18	52207	1	Label – Operation Switch, Automatixx
9	84608	1	Receiver Kit – DS	19	69689	1	Label – Logo, SECURITY GUARD™
ns	85121‡	1	Receiver Kit, Tall – DS	20	77717	1	Label – Upper, Automatixx
10	84609	1	Receiver Kit – PS	21	77719	1	Label – Lower, Automatixx
ns	85122‡	1	Receiver Kit, Tall – PS				
Item 2			**84624 Light Bar Channel**				
22		1	Light Bar	25		2	1/4-20 x 1 Hex Cap Screw G5
23	77727	1	Label – Logo, SnowEx® Light Bar	26		2	1/4 Flat Washer
24		1	Light Bar Top Plate, Center	27		2	1/4-20 Hex Locknut GB
Item 4			**84595 Attach Handle Kit**				
28	84596	1	Attach Handle Release Cam Kit	29	84779	1	Handle
Item 5			**84603 Attach Pin Kit**				
26		1	1/4 Flat Washer	30		1	Hitch Pin
27		1	1/4-20 Hex Locknut GB	31		1	1/4-20 x 1-1/2 Hex Cap Screw SS
Item 6			**84601 Link Arm Jack Stand Pin Kit**				
32		1	5/32 x 1-1/2 Cotter Pin	34		1	1/2 Flat Washer Type B Narrow SS
33		1	Stand Actuator Pin				
Item 8			**84635 Link Arm/Attach Handle Fastener Kit**				
35		1	5/16-18 x 1-1/4 Hex Cap Screw G5	36		1	5/16-18 Hex Locknut GB
Item 9			**84608 Receiver Kit – DS**				
		1	Receiver – DS	37	84611	1	Receiver Pin Kit
Item 10			**84609 Receiver Kit – PS**				
		1	Receiver – PS	37	84611	1	Receiver Pin Kit
Item 11			**84632 Lift Ram Base Pin Kit**				
38		1	5/8 x 4-1/4 Clevis Pin	39		1	1/8 Hairpin Cotter
Item 12			**84627 Lift Ram Rod Pin Kit**				
32		1	5/32 x 1-1/2 Cotter Pin	40		1	1/2 x 2-1/8 Clevis Pin HT
Item 13			**84647 Headgear Label Kit**				
17	52206	1	Label – Power Switch, Automatixx	20	77717	1	Label – Logo, Automatixx Upper
18	52207	1	Label – Operation Switch, Automatixx	21	77719	1	Label – Logo, Automatixx Lower
19	69689	1	Label – Logo, SECURITY GUARD	23	77727	1	Label – Logo, SnowEx Light Bar
Item 28			**84596 Attach Handle Release Cam Kit**				
41		1	Stand Lock Pin Spring	43		1	Handle Lock Pin
42		1	3/16 x 1-3/8 Roll Pin SS	44		1	Handle Lock Pin Lever
Item 37			**84611 Receiver Pin Kit**				
45	95739	1	3/4 x 5 Clevis Pin HT	46	42142	1	R-Pin Cotter
ns = not shown			SS = Stainless Steel	HT = Heat Treated			G = Grade

‡ Refer to the SPEEDWING Snowplow Installation Instructions to confirm when tall receivers are required.

Hydraulic Unit Components

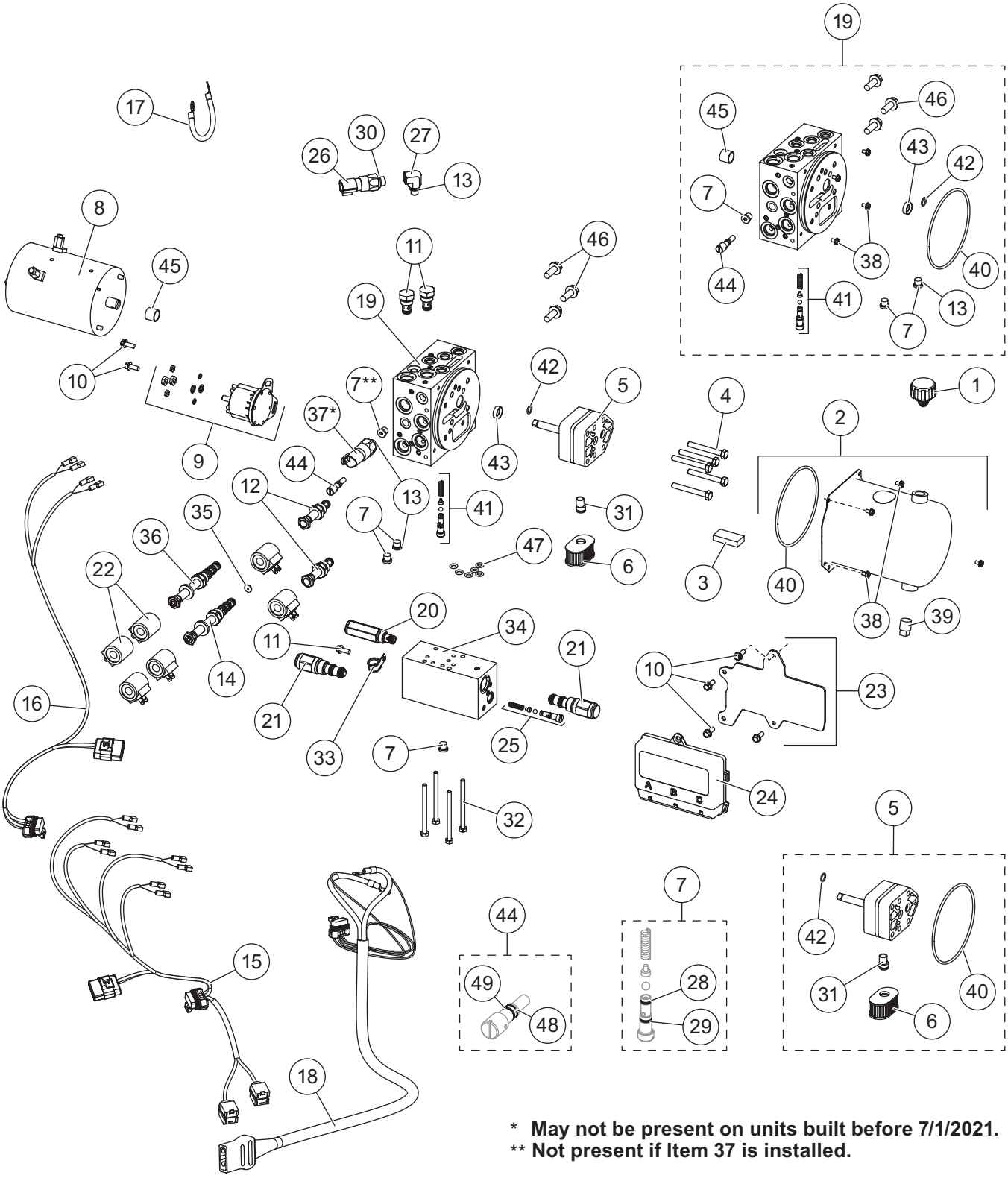

* **May not be present on units built before 7/1/2021.**
** **Not present if Item 37 is installed.**

52648 Hydraulic Unit							
Item	**Part**	**Qty**	**Description**	**Item**	**Part**	**Qty**	**Description**
1	48278	1	Breather	20	42889	1	Relief Valve 4000 psi
2	52289	1	Reservoir Kit	21	42888	2	Counterbalance Valve 1400 psi
3	73897	1	Magnet	22	52294	6	Coil
4	90073	5	5/16-18 x 2-1/4 Hex Cap Screw G5	23	52293	1	Plate, Module
ns	52252	1	Seal Repair Tool Kit w/Seal	24	52292-2	1	Module, Plow Control
5	52288	1	Hydraulic Pump Kit	25	52284	1	Relief Valve (1 set)
6	48281	1	Filter	26	52296	1	Pressure Switch
7	44344	4	Plug, Hex Socket –4 M ORB	27	52295	1	Elbow, 90° –4 M ORB/–6 F ORB
ns	52251	1	Bearing Repair Tool Kit w/Bearing	28	55371	2	O-Ring -008
8	52281	1	Motor	29	25731	2	O-Ring -010
9	52290	1	Motor Relay Kit, FLEET FLEX System	30	56569	1	O-Ring -906
10	44355	7	1/4-20 x 5/8 Hex Washer-Head Thread-Rolling Screw	31	10887	1	Inlet Fitting
				32	90696	4	1/4-20 x 3-1/2 Hex Cap Screw G5
11	84934	2	Check Valve	33	65340	1	Clamp Loop #10
12	84936	2	Valve, 2-Way NC w/Rev Flow	34	52262	1	Secondary Manifold Assembly w/o Valves (incl. items 16, 36, 48)
13	44343	6	O-Ring -904				
14	52285	1	Valve, 4-Way, 3-Position Closed Center	35	52541	1	Orifice Disc 0.060
				36	84937	1	Valve, 4-Way, 3-Position
15	70448	1	Plow Control Harness, 4-Coil	ns		3	Fuse, 5A Mini Automotive-Style (for items 25 and 26)
16	52077	1	Plow Control Harness, 2-Coil				
17	29071	1	Vehicle Battery Cable 8"	37*	86853	1	Pressure Switch (Scrape Maxx™ down-force feature)
18	52291	1	Snowplow Battery Cable				
19	52258	1	Manifold Assembly w/o Valves SW				
Item 2			**52289 Reservoir Kit**				
38	66607	4	#10-24 x 5/16 Machine Screw	40	66519	1	O-Ring 2-250
39	92079	1	Plug, Square 3/8 NPTF				
Item 20			**52258 Manifold Assembly w/o Valves SW**				
7	44344	3	Plug, Hex Socket –4 M ORB	43†	66515	1	Pump Shaft Seal
13	44343	3	O-Ring -904	44	48517	1	Quill
38	66607	4	#10-24 x 5/16 Machine Screw	45‡	56364	1	Bearing Sleeve
40	66519	1	O-Ring 2-250	46	D6452	3	3/8-16 x 1 Hex Serrated Flange Screw
41	52282	1	Relief Valve (1 set)	47	43818	6	O-Ring -109
42	56274	1	O-Ring -013				
Item 41			**52282 Relief Valve**				
29	55371	1	O-Ring -008	30	25731	1	O-Ring -010
Item 44			**48517 Quill**				
48	48239	1	O-Ring -106	49	48240	1	Back-Up Ring -106
O-Ring Service Kits							
–	52298-2	–	O-Ring Kit	–	48310	–	Seal Kit, 2-Way Valves
–	48309	–	Seal Kit, 3-Way & 4-Way Valves	–	52303	–	Seal Kit, 3-Way Valves (for item 31)
ns = not shown F = Female M = Male G = Grade							

* May not be present on units built before 7/1/2021.

† Use 52252 tool to install.

‡ Use 52251 tool to install.

Go to *www.snowexproducts.com* for hydraulic unit service information and specifications.

Lift and Angle Ram Components

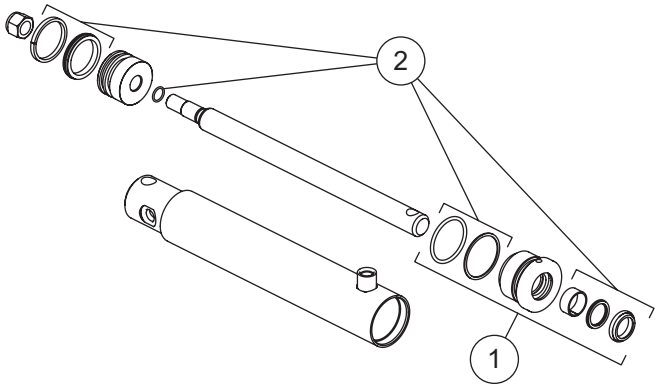

90910 Lift Ram Assembly 2 x 9-3/4 DA (Black) 84420* Lift Ram Assembly 2 x 9-3/4 DA (Red)			
Item	**Part**	**Qty**	**Description**
1	49499	1	1" Gland Assembly
2	48520	1	Seal Kit 2" DA Ram

* Discontinued

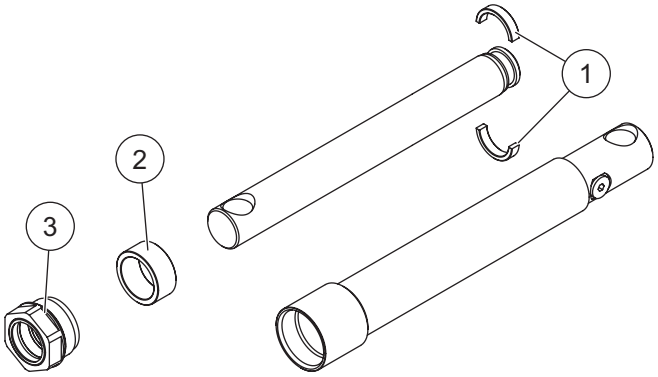

100259 Angle Ram Assembly 1-1/2 x 12 (Black) 84421* Angle Ram Assembly 1-1/2 x 12 (Red)			
Item	**Part**	**Qty**	**Description**
1	57879	1	Split Bearing Kit
2	56537	1	Spacer
3	48985	1	Gland Nut Assembly

* Discontinued

Hoses and Fittings

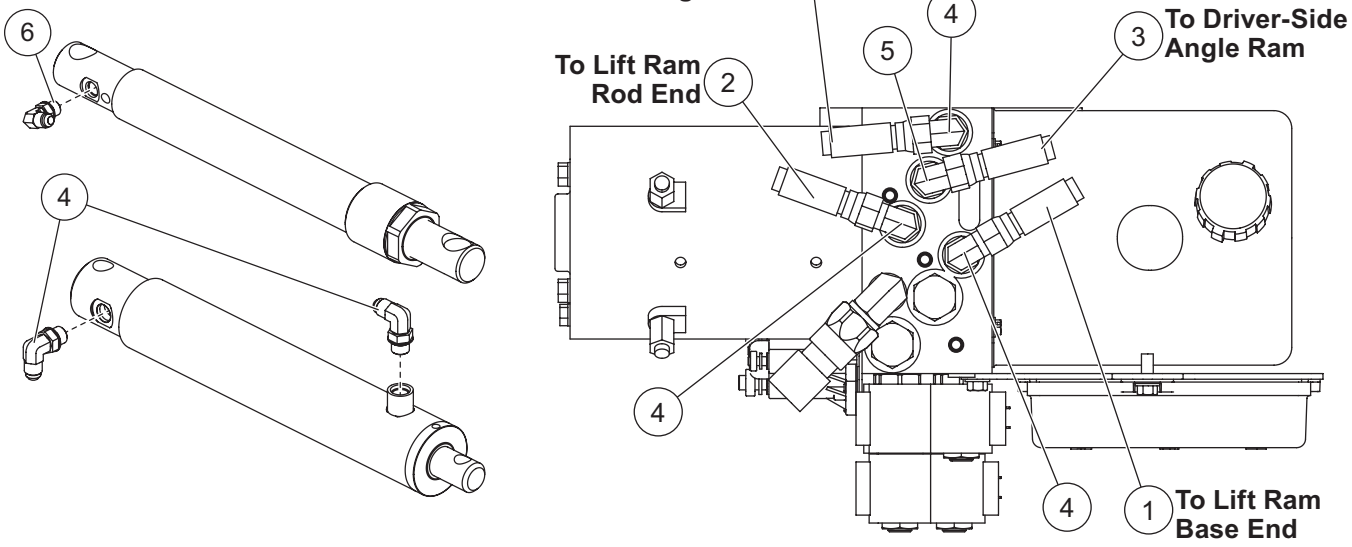

Hoses and Fittings							
Item	**Part**	**Qty**	**Description**	**Item**	**Part**	**Qty**	**Description**
1	84446	1	Hose, 1/4 x 14 w/F JIC Ends	5	40572	1	Elbow, Extra Long 90° –6 M JIC/–6 M ORB
2	40570	1	Hose, 1/4 x 22 w/F JIC Ends				
3	52304	2	Hose, 3/8 x 36 w/F JIC Ends	6	77929	1	Elbow, 90° –6 M JIC/–6 M ORB w/Screen
4	40571	6	Elbow, 90° –6 M JIC/–6 M ORB				
ns	56823	1	Hose Wrap				
F = Female			ns = not shown				M = Male

Electrical Components

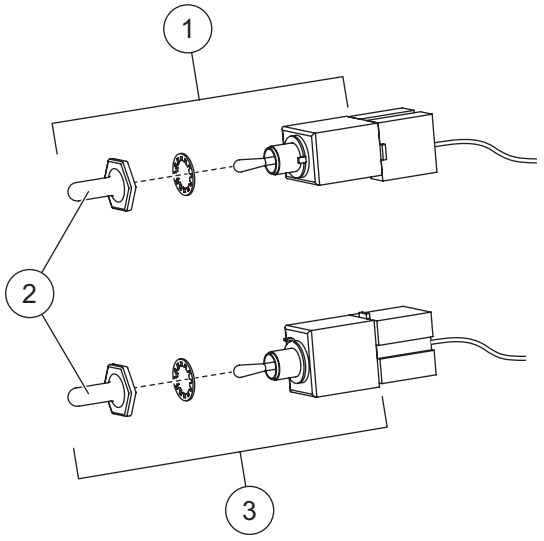

Plow-Side Electrical Components							
Item	**Part**	**Qty**	**Description**	**Item**	**Part**	**Qty**	**Description**
1	40575	1	Toggle Switch (MOM-ON, OFF, ON)	3	40576	1	Toggle Switch (MOM-ON, OFF, MOM-ON)
2	48259	2	Switch Boot				
Vehicle-Side Electrical Components							
§	72527	1	Vehicle Battery Cable	ns	48325	2	Plug Cover
§	28587	1	Vehicle Control Harness				
ns = not shown							

§ For diagram see Vehicle-Side Harness Diagram.

Vehicle-Side Harness Diagram

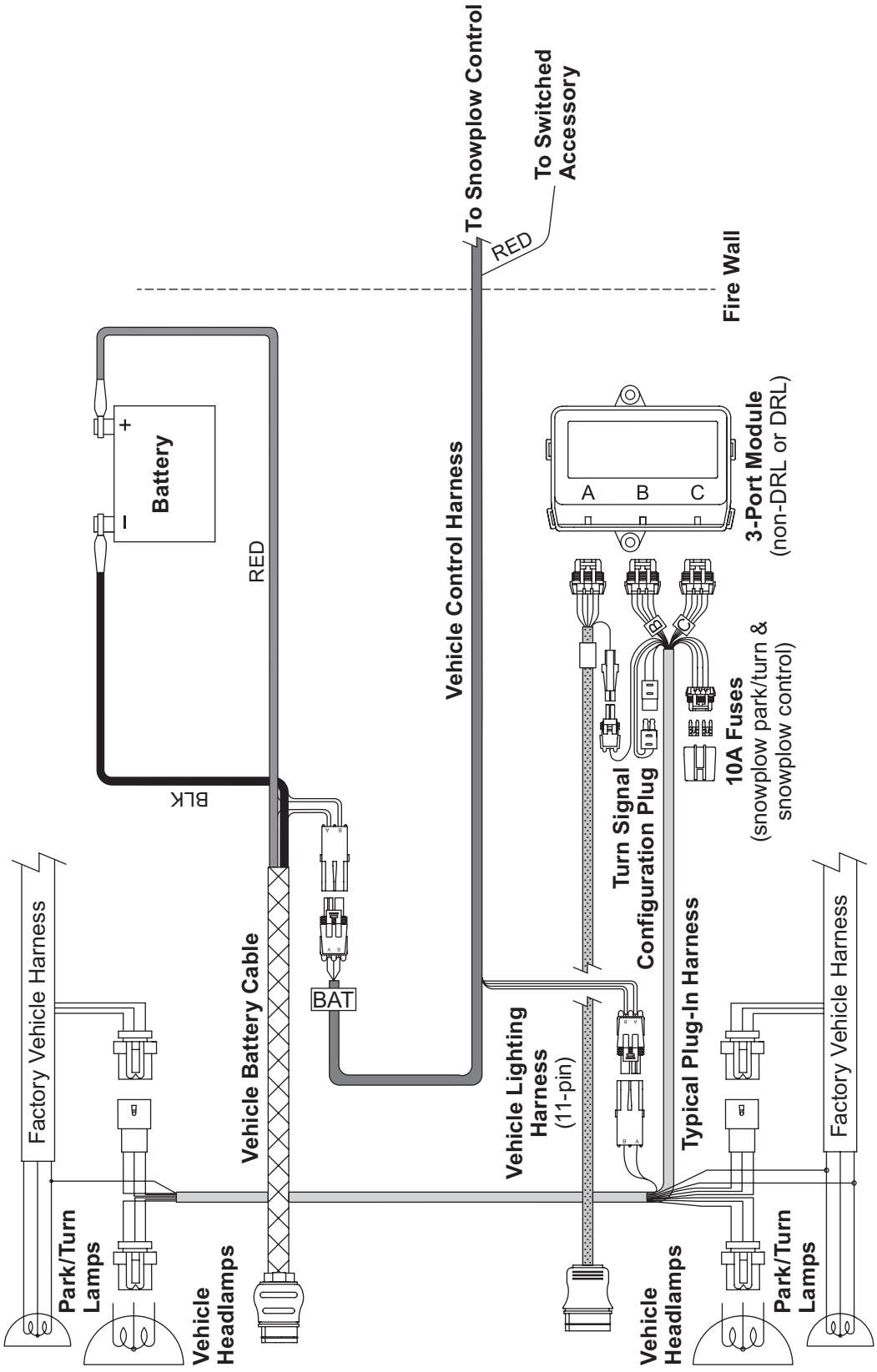

Headlamp Components – Halogen

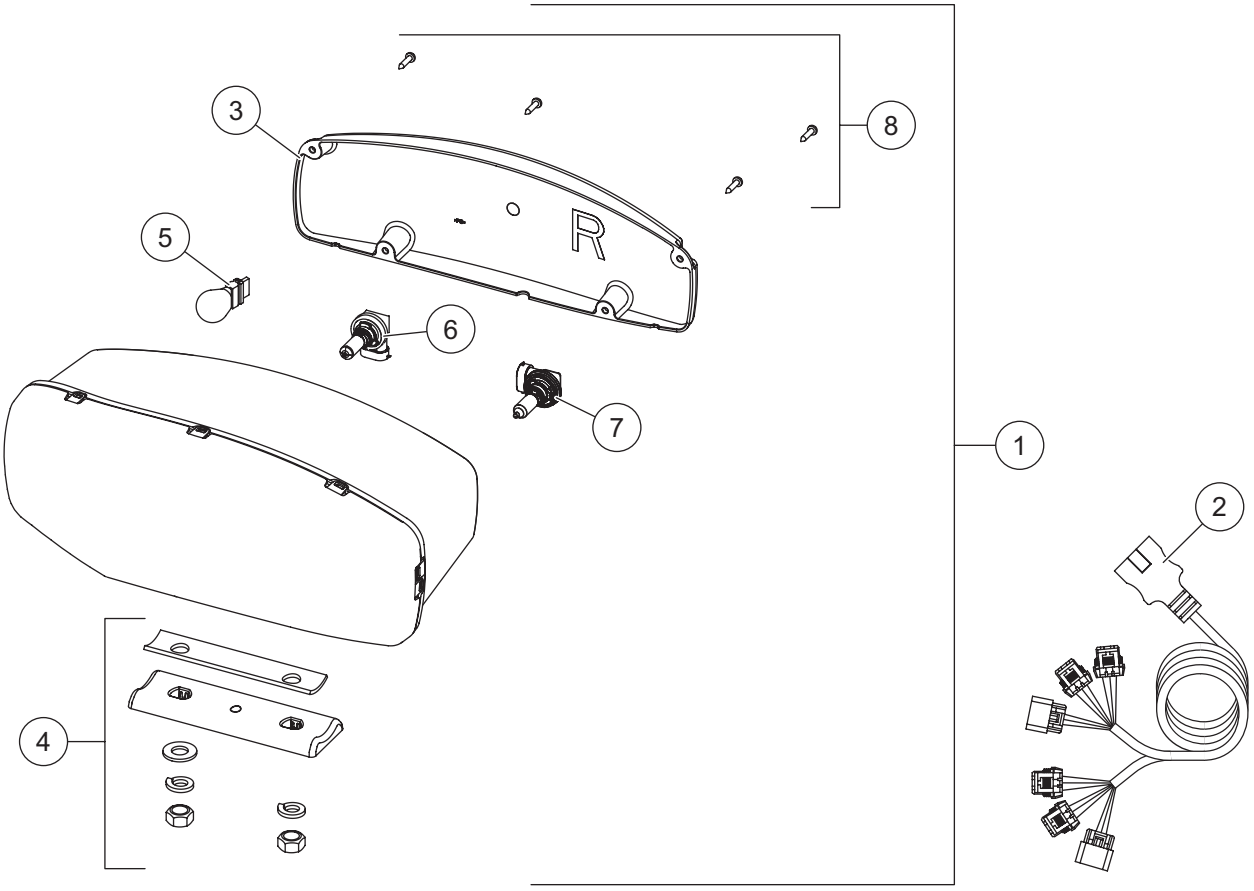

38800 Headlamp Kit H9/H11 (pair)							
Item	**Part**	**Qty**	**Description**	**Item**	**Part**	**Qty**	**Description**
1	38802	1	Headlamp Service Kit H9/H11 – PS	2	38807	1	Harness Service Kit H9/H11
ns	38801	1	Headlamp Service Kit H9/H11 – DS				
Item 1	**38801/38802 Headlamp Service Kit H9/H11 – PS/DS**						
3	38803	1	Rear Cover Kit H9/H11 – PS	6	38811	1	Headlamp Bulb Service Kit H11
ns	38812	1	Rear Cover Kit H9/H11 – DS	7	38809	1	Headlamp Bulb Service Kit H9
4	38804	1	Mounting Hardware Kit H9/H11	8	38808	1	Cover Screws Service Kit H9/H11 (pkg of 4)
5		1	Park/Turn Bulb (trade no. 4157NAK)				
ns = not shown							

Headlamp Kit – LED

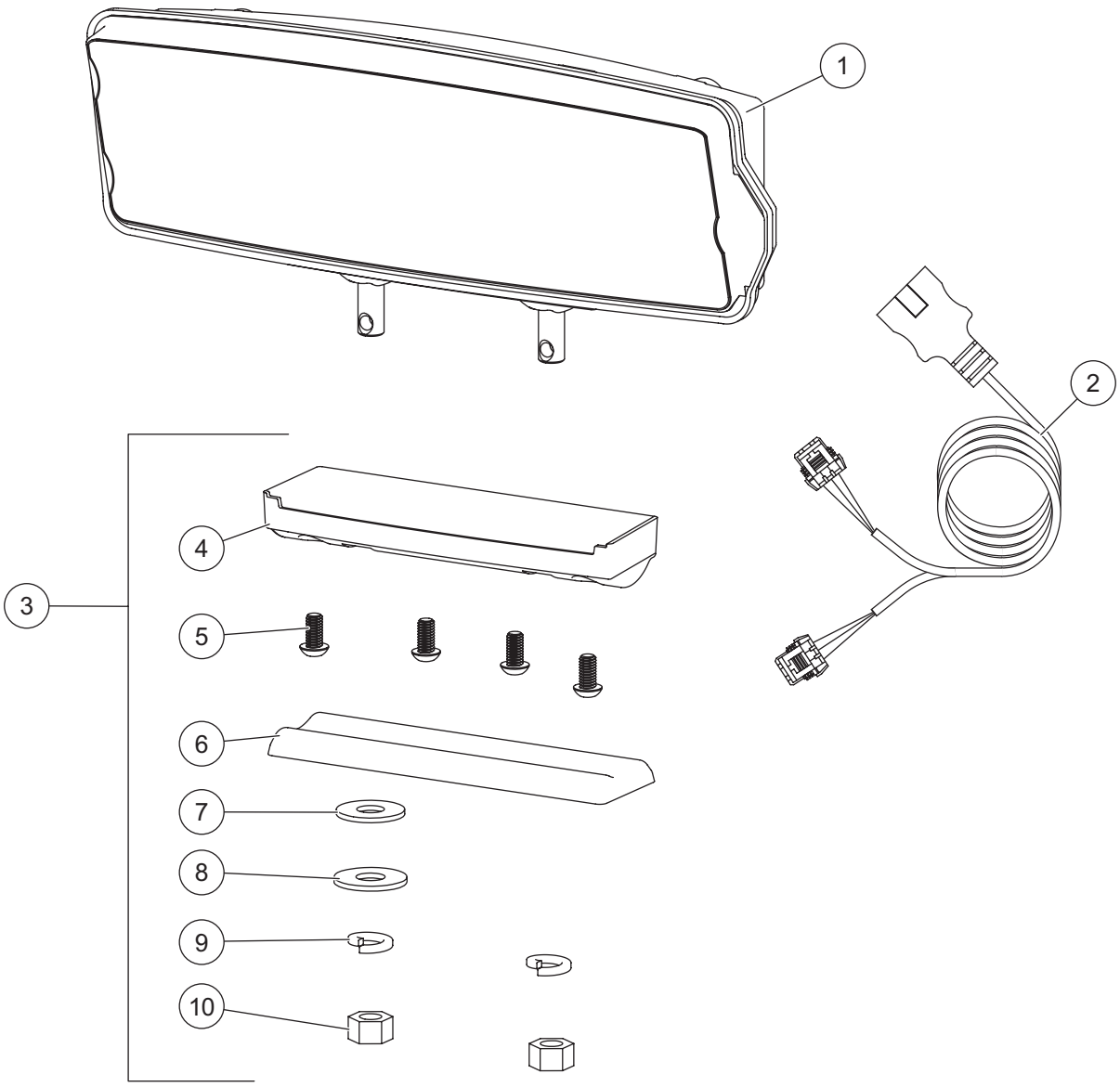

Headlamp Kit LED							
Item	**Part**	**Qty**	**Description**	**Item**	**Part**	**Qty**	**Description**
1	39901	1	Headlamp Service Kit LED – DS	3	39903	1	Mounting Hardware Kit LED
ns	39902	1	Headlamp Service Kit LED – PS	ns	72512	1	LED Harness Connector Cover (pkg of 2)
2	72548	1	Harness Service Kit LED				
Item 3			**39903 Mounting Hardware Kit LED**				
4		1	Plastic Casing	8		1	1/2 Flat Washer
5		4	1/4 Button Cap Screw	9		2	1/2 Lock Washer
6		1	Headlamp Swivel	10		2	1/2 Hex Nut
7		1	1/2 Rubber Washer	ns		1	Metal Insert
ns = not shown							

TrynEx International, LLC
531 Ajax Drive
Madison Heights, MI 48071-2429
www.snowexproducts.com

A DIVISION OF DOUGLAS DYNAMICS, LLC

Copyright © 2026 Douglas Dynamics, LLC. All rights reserved. This material may not be used, reproduced, or copied in any manner, in whole or in part, in any printed, mechanical, electronic, film, or other distribution and storage media, nor analyzed or manipulated in any manner for the purpose of training artificial intelligence technologies or systems, without the written consent of TrynEx International, LLC. In accordance with Article 4(3) of the Digital Single Market Directive 2019/790, TrynEx International expressly reserves this work from the text and data mining exception. Authorization to photocopy items for internal or personal use by TrynEx International outlets or equipment owner is granted.

TrynEx International reserves the right under its product improvement policy to change construction or design details and furnish equipment when so altered without reference to illustrations or specifications used. TrynEx International or the vehicle manufacturer may require or recommend optional equipment for snow removal. Do not exceed vehicle ratings with a snowplow. TrynEx International offers a limited warranty for all equipment and accessories. See separately printed page for this important information. The following are registered (®) or unregistered (™) trademarks of Douglas Dynamics, LLC: Automatixx®, Scrape Maxx™, SECURITY GUARD™, SnowEx®, SPEEDWING™.

Printed in U.S.A.